Image not found or type unknown https://www.zazzeri.it/us/wp-content/uploads/2017/04/b3daf2_357a4470072a4

Modern - Built-in washbasin set

Codice kit: 3305 MLI-050

Built-in washbasin set

Componenti

Single-lever mixer

Cod: 3305A113AAL

Built-in washbasin set - spout 180 mm - external part

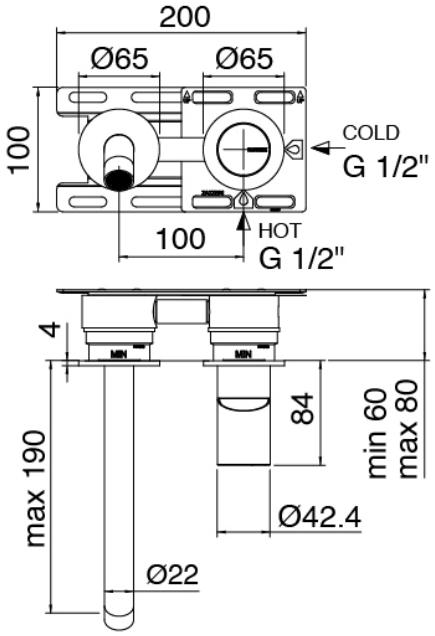

Concealed part (3300B113)

Cod: 3300B113A00

Built-in washbasin set - external part

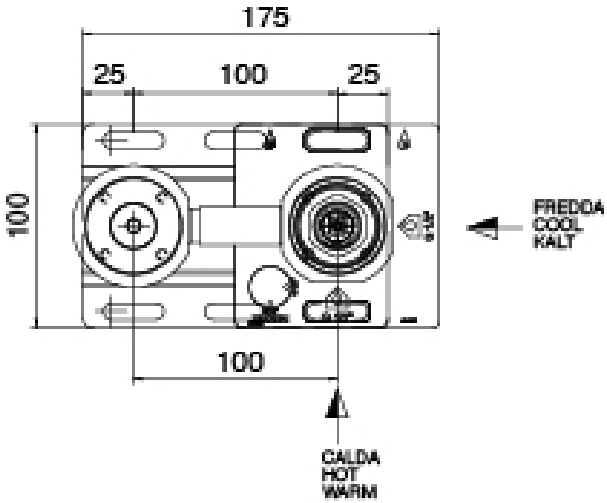

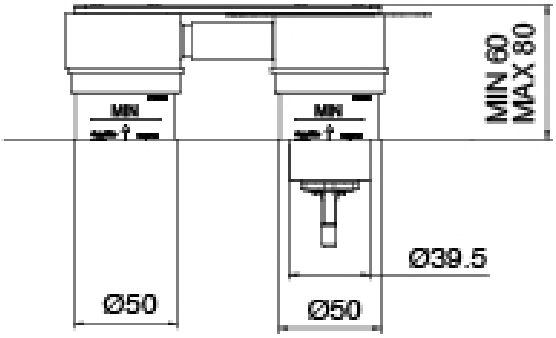

Handle MA02 Z316_sh

Cod: 3305MA02A00

HANDLE MA02 Handle for built-in parts

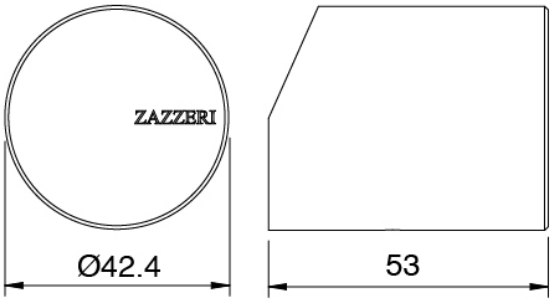

Finiture disponibili:

finiture speciali su richiesta salvo quantitativi minimi di ordine garantiti

brush steel ASAS

antracite APAP

bronzorame BPBP

carbon KPKP

rame RPRP

cognac CPCP

orobianco GPGP