Image not found or type unknown https://www.zazzeri.it/en/wp-content/uploads/2017/04/b3daf2_357a4470

Modern - Washbasin mixer

Codice kit: 2100 MLX-030

Washbasin mixer without plug

Componenti

Pop spout

Cod: 2100CL01A00

Spout for washbasin - Brass

Single-lever mixer

Cod: 2100A099A00

Washbasin mixer without plug - without spout

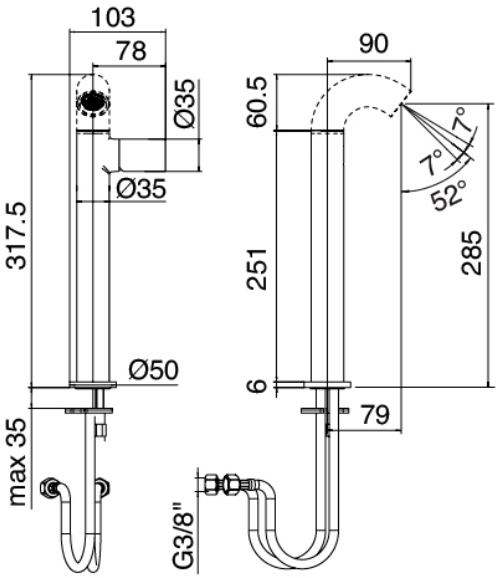

Pressure-controlled drain

Cod: 2900K302A00

Pressure control drain

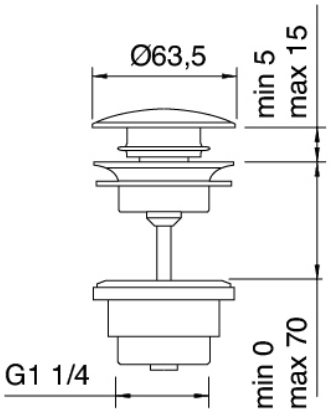

Finiture disponibili:

finiture speciali su richiesta salvo quantitativi minimi di ordine garantiti

cromo CRCR

acciaio spazzolato ASAS

bianco 1010

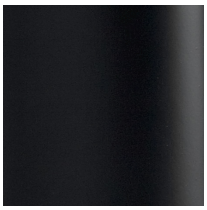

nero 3131

nero fumo 3232

arancio albicocca	4242
verde mela	5252
viola mirtillo	6262
bianco latte	7272
blu luna	8282