Image not found or type unknown https://www.zazzeri.it/en/wp-content/uploads/2017/04/b3daf2_357a4470072a4

Modern - Shower arm with shower head and hand shower

Codice kit: 3600 DDI-090

Shower arm with shower head, hand shower and built-in mixer – 2 exits

Componenti

Shower arm

Cod: 3600BR01A00

Shower arm

Stand alone hand shower

Cod: 31000413A00

Handshower set with water outlet and round plate

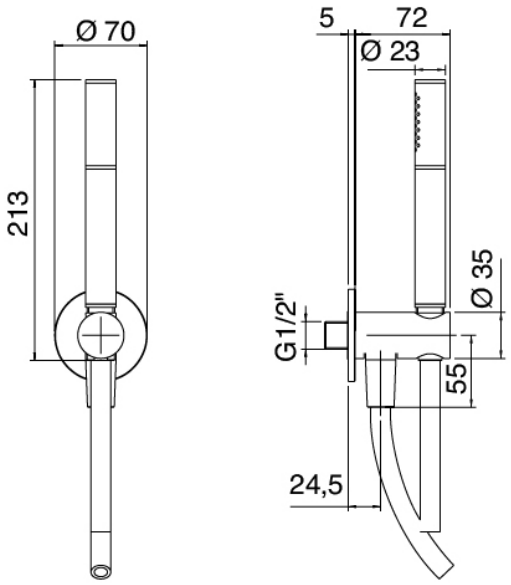

Single-lever mixer

Cod: 3600A401A00

Concealed shower mixer with diverter - external part

Concealed part

Cod: 2900A401A00

Concealed shower mixer with diverter - concealed part

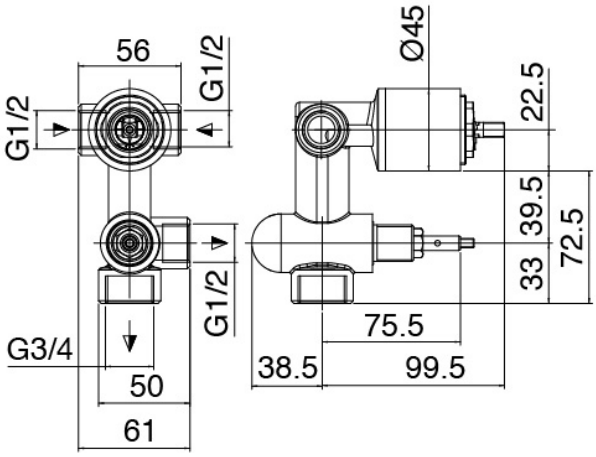

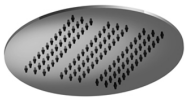

Shower head

Cod: 3600SO02A00

Antilimescale showerhead - D.250 mm

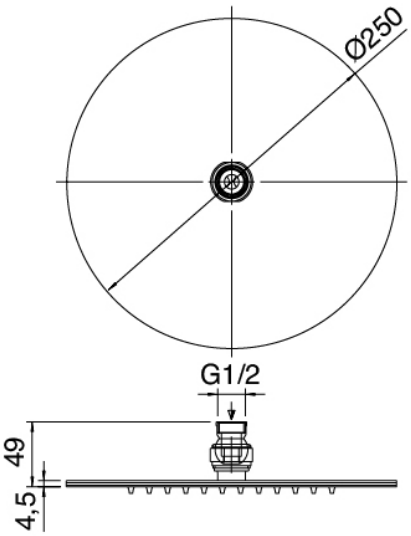

Finiture disponibili:

finiture speciali su richiesta salvo quantitativi minimi di ordine garantiti

cromo CRCR

acciaio spazzolato ASAS