Image not found or type unknown https://www.zazzeri.it/en/wp-content/uploads/2017/04/b3daf2_357a4470

SURF - Built-in shower set

Codice kit: 6300 DDI-110

2-way concealed shower mixer with with showerhead and hand shower SURF

Componenti

Shower arm

Cod: 3600BR01A00

Shower arm

Shower head

Cod: 2900SO07A00

Antilimescale showerhead - D.220 mm - Inspectable

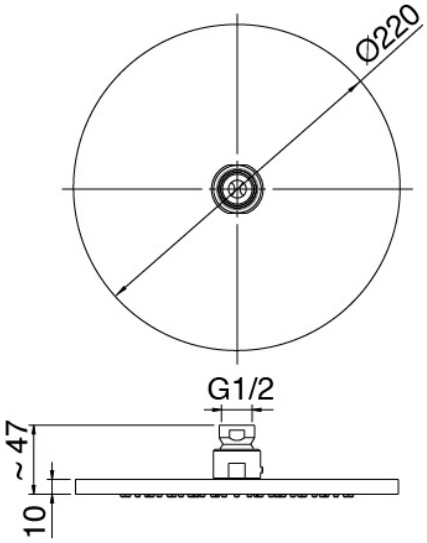

Handshower set Surf

Cod: 6300Q419A00

Shower set - Antilimescale handshower SURF water outlet and support

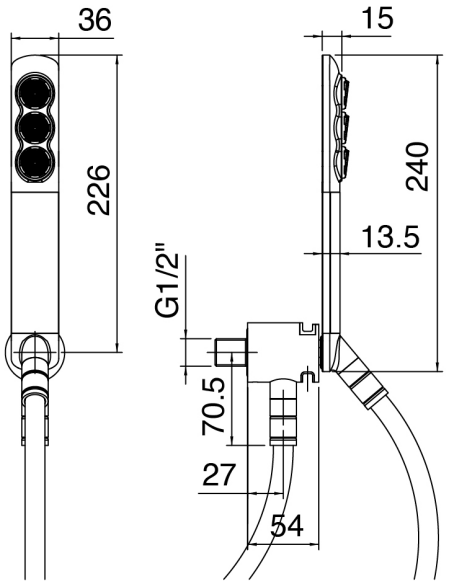

Concealed part

Cod: 2900A401A00

Concealed shower mixer with diverter - concealed part

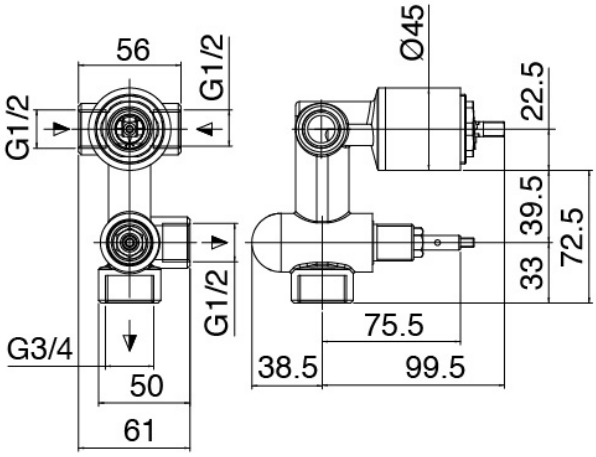

Single-lever mixer

Cod: 6300A401AA0

Concealed shower mixer with diverter - external part

Finiture disponibili:

finiture speciali su richiesta salvo quantitativi minimi di ordine garantiti

chrome finish CRCR

brushed steel NFNF

white 1010

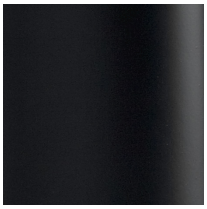

black 3131

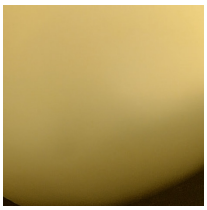

polished brass OLOL