Image not found or type unknown https://www.zazzeri.it/en/wp-content/uploads/2017/04/b3daf2_357a4470072a4

Modern - Bathtub set on tubes

Codice kit: 2702 EVT-050

Built-in bathtub set with hand shower -Two mixers

Componenti

Concealed part (B100)

Cod: 3300B100A00

Column-mounted washbasin/bath spout - concealed part

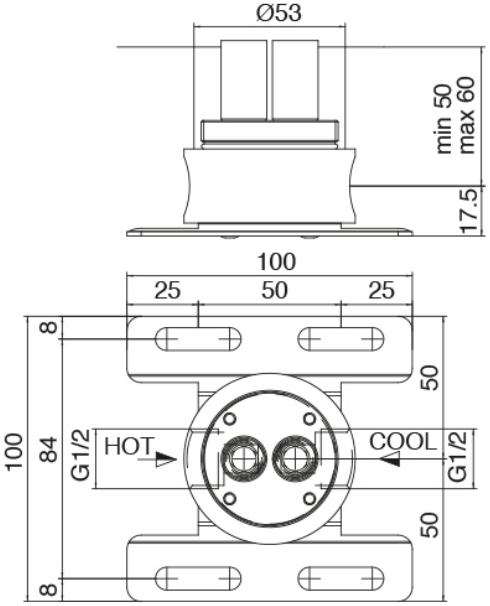

Column-mounted bathtub

Cod: 2702W110A00

Column-mounted bathtub spout with Handshower without flexible - External part - Two mixers

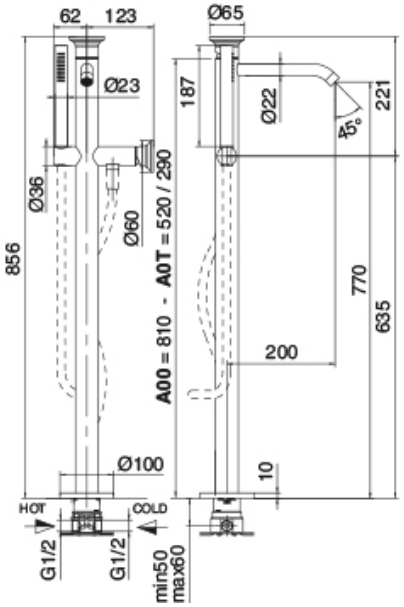

Flexible

Cod: 3300N504A01

PVC flexible pipe for handshower - Black - L 1,2m

Disk handle

Cod: 2700PA01A00

Disk handle washbasin/bidet

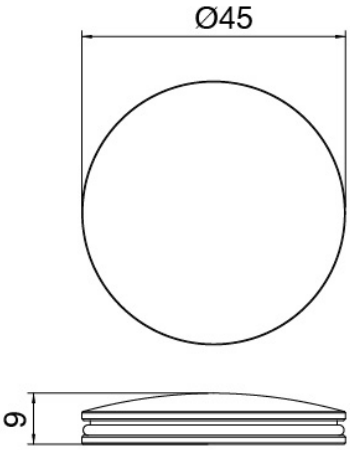

Disk handle PA02

Cod: 2700PA02A00

Disk handle for built-in elements

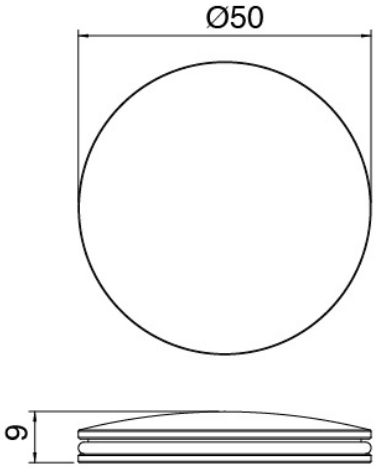

Finiture disponibili:

finiture speciali su richiesta salvo quantitativi minimi di ordine garantiti

brush steel ASAS

antracite APAP

bronzorame BPBP

carbon KPKP

rame RPRP

cognac CPCP

orobianco GPGP